1300 Industrial Road, Unit #19
San Carlos, CA 94070
FREE CALL 1-866-695-5862 US & Canada
info@lumascape.com

LUMASCAPE USA INC.

LS9404LED Vedita

Downlight

humantouch™ opticlear™ microantileach™ electropolish+™ OPTIONAL

CADdetails d5 Dimmable IP68 Intertek

The LS9404LED provides a quick, simple and low profile method of retaining the luminaire into a ceiling or wall cavity, and features advanced dimming and control via new Lumascape d5 driver technology: When high output is required, it can be deployed in its full output, 2 W configuration; If a dot of light is required, it can be set as low as 0.2 W, (either by the factory or in the field). Alternatively, the luminaire can be dynamically dimmed. Constructed in part from 316 marine grade stainless steel, this luminaire also comes with Lumascape proprietary **ElectroPolishPlus™** surface treatment as standard, or optional powder coated white.

LS9404LED Vedita

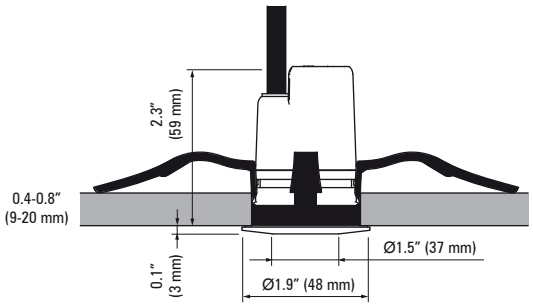

Specifications

Lamp Source	1 W or 2 W LED ☐ White (4 300 K typical) Warm white (3 000 K typical) ■ Blue (470 nm) *Other colors by request*
Approved Use	Suitable for wet locations Recessed - 2" min insulation gap
Control Signal	0-10 V (current sourcing) PWM On-site or factory-programmable brightness
IP Rating	IP68
Construction	316 marine grade stainless steel bezel Powder coated aluminum bezel ☐ White
Installation Type	Ceiling or wall mount clip *Supplied as standard*
Standard Inclusions	**MicroAntiLeach™** wire entry 6.5' (2 m) cord Ø41 mm holesaw
Impact Rating	IK10
Remote Power Supplies *Order separately*	Refer to Technical Data section for application specific options
Ambient Operating Temperature	-4 °F to 122 °F (-20 °C to 50 °C)
Photometrics	Refer to www.lumascape.com

Any luminaire can become hot - take care with appropriate use and placement

LS9404LED → [ ] → [ ] → [ ] → **13-DIM** → [ ]

LAMP

Description	Wattage	Color	Code
LED	1 W	White (4 300 K typical)	**1W4**
		Warm white (3 000 K typical)	**1H4**
		Blue (470 nm)	**1B4**
	2 W	White (4 300 K typical)	**2W4**
		Warm white (3 000 K typical)	**2H4**
		Blue (470 nm)	**2B4**

FINISH

Description	Code
Stainless steel	**SS**
White, powder coat	**CW**
Black, powder coat	**CB**
Silver, powder coat	**CS**

OPTICAL SYSTEM

Beam		Code
Narrow	11°	**NR**
Medium	20°	**ME**
Wide	35°	**WD**
Linear	10° x 45°	**LN**[1]
Marker		**FL**[2]

[1] Linear with wall wash filter creates a linear horizontal beam.
[2] Recommended for use with lower brightness settings only.

INPUT VOLTAGE

Description	Code
0-10 V or PWM Dimmable Driver, 12-24 V DC	**13-DIM**[1]

[1] Requires appropriate transformer.

Options	Code
Standard	**U**
Wall wash	**W**[1]

[1] Not applicable with 'FL' beam.

Dimmable Wiring Diagram Reference

Input Voltage	LED Color	Control Type	Wiring Diagram
13-DIM	Single Color	PWM	2,4

Diagram 2 - 0-10 V Dimming Via Current Sourcing Module, or Pulse Width Modulated Dimming (PWM) - Low Voltage LED Luminaire with d5 Driver on 24 V DC Circuit

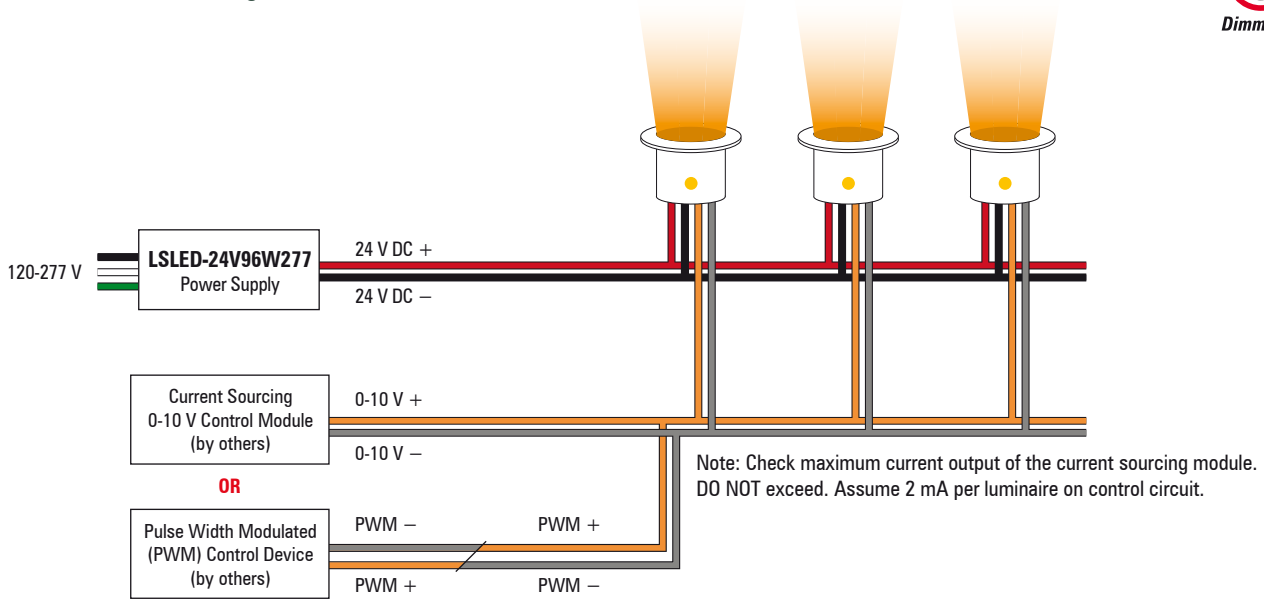

Note: Check maximum current output of the current sourcing module. DO NOT exceed. Assume 2 mA per luminaire on control circuit.

NOTE: Reversed dimming signal polarity connection at the PWM Control device is correct. Observe correct polarity connections in all other locations

Use compatibility table to determine maximum number of luminaires the power supply can support.

Diagram 4 - 0-10 V Dimming - Low Voltage LED Luminaire with d5 Driver on 24 V DC Circuit

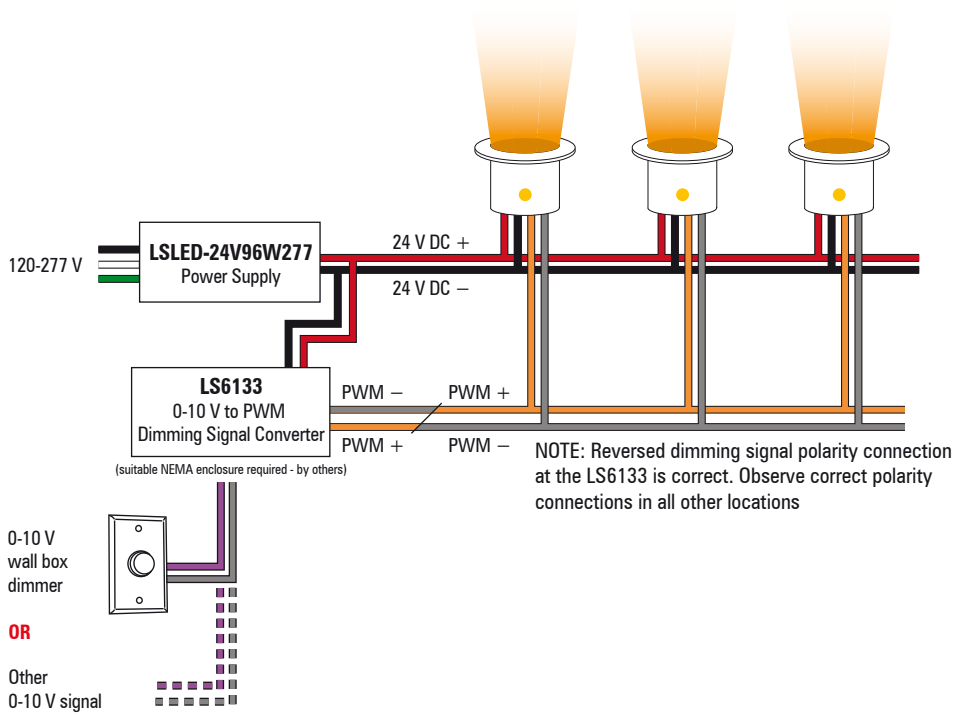

NOTE: Reversed dimming signal polarity connection at the LS6133 is correct. Observe correct polarity connections in all other locations

Use compatibility table to determine maximum number of luminaires the power supply can support.

NOTE: The above diagrams are intended to show electrical pathways between luminaires and ancillary devices. These diagrams are not intended to show type or color of cord/wire, wire gauge or approved use of the cord/wire supplied with luminaires.

Consult the luminaire-specific cutsheet or the factory for detailed specifications.

Transformers and Power Supplies for Low Voltage LED Luminaires

The following list of transformers and power supplies are for use with luminaires specifically described as being compatible with either 12 V AC (wirewound only) transformers or with 12-24 V DC power supplies. Compatibility will be noted in the ordering code of the luminaire concerned, and will typically be referenced by Voltage Code '13' or '13-DIM'. In the case of '13-DIM' additional components may be required. Refer to the applicable wiring diagram/s.

Compatibility with each transformer or power supply is indicated by the value mentioned, representing the maximum number of luminaires that may be powered from each transformer or power supply. Please note, this does not take into consideration voltage drop or ampacity limits of the branch circuit. For assistance, please contact factory.

	Wall Mounted Landscape Lighting Transformers			Wall Mounted Transformers				Class 2 Power Supply	Direct Burial Transformer
	LS-TWM-1-300	**LS-TWM-2-600**	**LS-TWM-3-900**	**LS-TWM-50**	**LS-TWM-100**	**LS-TWM-150**	**LS-TWM-250**	**LSLED-24V96W277**	**LS-TDB1-300**
Input Voltage	120 V, 60 Hz	120 V, 60 Hz	120 V, 60 Hz	120 V, 60 Hz	120 V, 60 Hz	120 V, 60 Hz	120 V, 60 Hz	120-277 V, 50/60 Hz	120 V, 60 Hz
Output Voltage	12/13/14/15 V 60 Hz	12/13/14/15 V 60 Hz	12/13/14/15 V 60 Hz	12 V, 60 Hz	12 V, 60 Hz	12 V, 60 Hz	12 V, 60 Hz	24 V DC	12.5 V, 60 Hz
Wattage	1 x 300 W circuit	2 x 300 W circuits	3 x 300 W circuits	50 W	100 W	150 W	250 W	96 W	300 W
LS9404LED, 1 Watt								2* - 40	
LS9404LED, 2 Watt								30	

*Minimum number of luminaires.

Class 2 LED Power Supplies

LSLED-24V96W277

Electronic DC power supply - wall mounted

Input	120-277 V, 50/60 Hz
Rating	96 W / 4 A
Output	24 V DC
Output Circuits	1
Approvals	CSA, CSA-US
Location	Wet location
Dimensions	**H** 12.32" (313 mm) **W** 2.54" (65 mm) **D** 1.67" (42 mm)
Weight	2 lb (0.9 kg)

LSLED-24V12W277

Electronic DC power supply - NEMA enclosure required (by others)

Input	120-277 V, 50/60 Hz
Rating	12 W / 0.5 A
Output	24 V DC
Output Circuits	1
Approvals	UL, CUL Recognized, Class 2
IP rating	IP66
Location	Wet location
Dimensions	**H** 3.35" (85 mm) **W** 1.42" (36 mm) **D** 0.91" (23 mm)
Weight	0.282 lb (0.1 kg)

Control Related Equipment

LS6133

0-10 V to PWM translator - NEMA enclosure required (by others)

Input	24 V DC
Rating	96 W max
Output	4 A max
Output Circuits	1
Approvals	UL, CUL Recognized, Class 2
IP Rating	IP66
Dimensions	**H** 5.2" (132 mm) **W** 1.3" (33 mm) **D** 1" (25 mm)
Weight	0.2 lb (0.1 kg)

LS67100

DMX to PWM translator - dry location only

Input	24 V DC
Rating	4 x 60 W max
Output	4 x 2.5 A max
Output Circuits	4
Approvals	UL, CUL
IP Rating	N/A
Dimensions	**H** 11.25" (286 mm) **W** 4.6" (117 mm) **D** 3.2 (82 mm)
Weight	0.5 lb (0.2 kg)